Technical sheet :

# M 30-2

MANITOU
HANDLING YOUR WORLD

| | Technical characteristics | | Metric | Imperial |
|---|---|---|---|---|
| 1.1 | Manufacturer | | Manitou | Manitou |
| 1.2 | Model Name | | M 30-2 | M 30-2 |
| 1.3 | Power source | | Diesel | Diesel |
| 1.4 | Operator type | | Seated | Seated |
| 1.5 | Max. capacity | Q | 3000 kg | 6614 lb |
| 1.6 | Load center of gravity | c | 500 mm | 20 in |
| 1.8 | Load distance, centre of drive axle to fork | x | 747 mm | 29 in |
| 1.9 | Wheelbase | y | 1995 mm | 79 in |
| | **Weight** | | | |
| 2.1 | Service weight | | 5950 kg | 13118 lb |
| 2.2 | Weight on front axle (laden) / rear axle (laden) | | 7515 kg / 1435 kg | 16568 lb / 3164 lb |
| 2.3 | Weight on front axle (Unladen) / rear axle (Unladen) | | 2365 kg / 3585 kg | 5214 lb / 7904 lb |
| | **Wheels** | | | |
| 3.1 | Tires type | | Pneumatic | Pneumatic |
| 3.2 | Dimensions of front wheels | | 14,5R20 18PR MPT80 | 14,5R20 18PR MPT80 |
| 3.3 | Dimensions of rear wheels | | 10R17,5 134/132 G291 | 10R17,5 134/132 G291 |
| 3.5 | Number of front wheels / rear wheels | | 2 / 2 | 2 / 2 |
| 3.5.2 | Number of drive wheels | | 2 | 2 |
| 3.6 | Front wheel gauge | b10 | 1550 mm | 61 in |
| 3.7 | Rear wheel gauge | b11 | 1570 mm | 62 in |
| | **Dimensions** | | | |
| 4.7 | Height of overhead guard (cabin) | h6 | 2507 mm | 99 in |
| 4.8 | Seat height/stand height | h7 | 1484 mm | 58 in |
| 4.19 | Overall length | l1 | 4701 mm | 185 in |
| 4.20 | Length to face of forks | l2 | 3501 mm | 138 in |
| 4.21 | Overall width | b1 | 1923 mm | 76 in |
| 4.22 | Forks section x width x length | s / e / l | 40 mm x 125 mm / 1200 mm | 2 in x 5 in / 47 in |
| 4.23 | Fork carriage ISO 2328 (class/form) A/B | | 3 | 3 |
| 4.24 | Fork carriage width | b3 | 1470 mm | 58 in |
| 4.31 | Ground clearance below mast | m1 | 460 mm | 18 in |
| 4.32 | Ground clearance at centre of wheelbase | m2 | 440 mm | 17 in |
| 4.34 | Aisle width for 800 x 1200 pallet lengthways | Ast | 5360 mm | 211 in |
| 4.35 | Turning radius | Wa | 3220 mm | 127 in |
| | **Performances** | | | |
| 5.1 | Travel speed (laden / unladen) | | 10 km/h / 22 km/h | 6 mph / 14 mph |
| 5.2.1 | Lifting speed (unladen) | | 0.30 m/s | 0.98 ft/s |
| 5.3.1 | Lowering speed (unladen) | | 0.40 m/s | 1 ft/s |
| 5.5 | Drawbar pull (Laden) | | 4670 daN | 4670 daN |
| 5.7 | Gradeability (laden / unladen) | | 14 % / 21 % | 14 % / 21 % |
| 5.10 | Service brake | | Hydraulic | Hydraulic |
| | **Engine** | | | |
| 7.2 | Engine power according to ISO 1585 | | 55 kW | 55 kW |
| 7.1 | Engine brand / model | | Perkins / 854F-E34T 54009.1 | Perkins / 854F-E34T 54009.1 |
| 7.2 | Engine power according to ISO 1585 | | 55 kW | 55 kW |
| 7.3 | Rated speed | | 2200 rpm | 2200 rpm |
| 7.4 | Number of cylinders / Capacity of cylinders | | 4 - 3400 cm³ | 4 - 207 in³ |
| | **Miscellaneous** | | | |
| 8.2 | Working hydraulic pressure for attachments | | 185 bar | 2683 PSI |
| 8.3 | Oil flow rate for attachments | | 97 l/min | 26 US gpm |
| 8.4 | Sound level at the driver's ear according to DIN 12 053 | | 76 dB | 76 dB |

## M 30-2 - Dimensional drawing

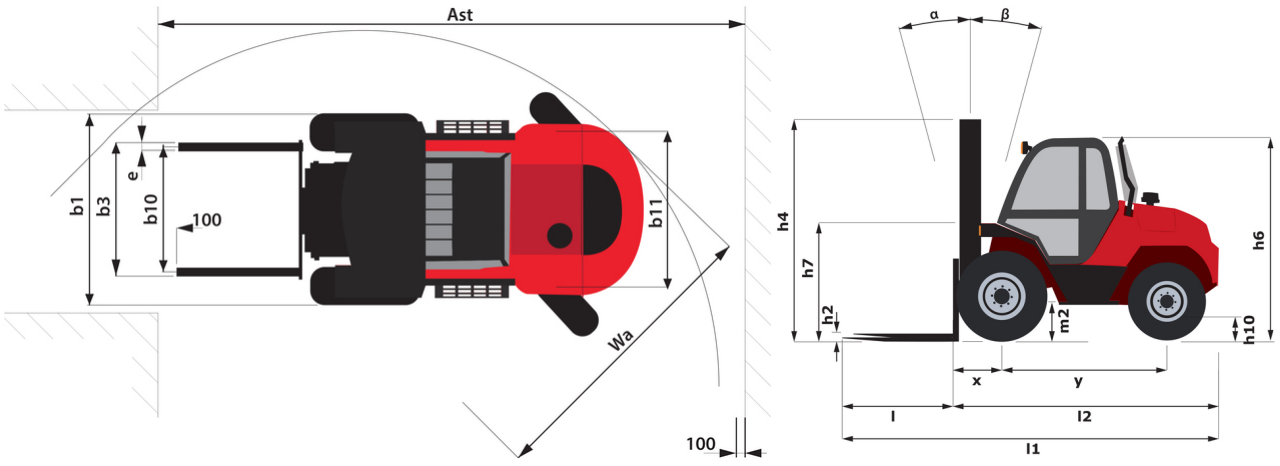

# Characteristics of masts and residual capacities

| Full Visibility Duplex (FVD) | | FVD 30 | FVD 33 | FVD 35 | FVD 37 | FVD 40 | FVD 45 | FVD 50 | FVD 55 |
|---|---|---|---|---|---|---|---|---|---|
| Mast/fork carriage tilt, forward | ° | 6 | 6 | 6 | 6 | 6 | 6 | 6 | 6 |
| Mast/fork carriage tilt, backward | ° | 12 | 12 | 12 | 12 | 12 | 12 | 12 | 12 |
| h1 - Mast lowered height | in (mm) | 93.5 (2375) | 99.4 (2525) | 103.3 (2625) | 109.6 (2785) | 117.1 (2975) | 127 (3225) | 136.8 (3475) | 146.7 (3725) |
| h2 - Mast free lift | in (mm) | 12.2 (310) | 12.2 (310) | 12.2 (310) | 12.2 (310) | 12.2 (310) | 12.2 (310) | 12.2 (310) | 12.2 (310) |
| h4 - Mast extended height | in (mm) | 162 (4115) | 173.8 (4415) | 181.7 (4615) | 189.6 (4815) | 201.4 (5115) | 221.1 (5615) | 240.7 (6115) | 260.4 (6615) |
| Residual capacity at max height | lb (kg) | 6614 (3000) | 6614 (3000) | 6614 (3000) | 6614 (3000) | 6614 (3000) | 6393 (2900) | | |
| Residual capacity with integrated side shift at max heigth | lb (kg) | 6614 (3000) | 6614 (3000) | 6614 (3000) | 6614 (3000) | 6614 (3000) | | | |
| Height at max capacity | in (mm) | 98.4 (2500) | 98.4 (2500) | 98.4 (2500) | 98.4 (2500) | 98.4 (2500) | 98.4 (2500) | 98.4 (2500) | 98.4 (2500) |

| Free Lift Triplex (FLT) | | FLT 37 | FLT 40 | FLT 43 | FLT 47 | FLT 50 | FLT 55 | FLT 60 | FLT 65 | FLT 70 |
|---|---|---|---|---|---|---|---|---|---|---|
| Mast/fork carriage tilt, forward | ° | 6 | 6 | 6 | 6 | 6 | 6 | 6 | 6 | 6 |
| Mast/fork carriage tilt, backward | ° | 12 | 12 | 12 | 12 | 12 | 12 | 12 | 12 | 12 |
| h1 - Mast lowered height | in (mm) | 89.6 (2275) | 93.5 (2375) | 99.4 (2525) | 103.3 (2625) | 109.6 (2785) | 117.1 (2975) | 127 (3225) | 136.8 (3475) | 146.7 (3725) |
| h2 - Mast free lift | in (mm) | 50.5 (1283) | 54.4 (1382) | 60.4 (1533) | 64.3 (1633) | 70.6 (1793) | 78.1 (1983) | 87.9 (2233) | 97.8 (2483) | 107.6 (2733) |
| h4 - Mast extended height | in (mm) | 186.3 (4732) | 198.1 (5032) | 209.9 (5332) | 225.7 (5732) | 237.5 (6032) | 257.2 (6532) | 276.9 (7032) | 296.5 (7532) | 316.2 (8032) |
| Residual capacity at max height | lb (kg) | 661 (300) | 6614 (3000) | 6614 (3000) | 6173 (2800) | 5732 (2600) | 4409 (2000) | 3968 (1800) | 2976 (1350) | 2205 (1000) |
| Residual capacity with integrated side shift at max heigth | lb (kg) | 6614 (3000) | 6614 (3000) | | | | | | | |
| Height at max capacity | in (mm) | 98.4 (2500) | 98.4 (2500) | 98.4 (2500) | 98.4 (2500) | 98.4 (2500) | 98.4 (2500) | 98.4 (2500) | 98.4 (2500) | 98.4 (2500) |

| Full Visibility Triplex (FVT) | | FVT 55 | FVT 67 |
|---|---|---|---|
| Mast/fork carriage tilt, forward | ° | 6 | 6 |
| Mast/fork carriage tilt, backward | ° | 12 | 12 |
| h1 - Mast lowered height | in (mm) | 120.3 (3055) | 136 (3455) |
| h4 - Mast extended height | in (mm) | 264.8 (6725) | 312 (7925) |
| Residual capacity at max height | lb (kg) | 2756 (1250) | |
| Height at max capacity | in (mm) | 98.4 (2500) | 98.4 (2500) |

MANITOU
HANDLING YOUR WORLD

**Head Office**
B.P. 249 - 430 rue de l'Aubinière
44150 Ancenis Cedex - France
Tel: +33 (0)2 40 09 10 11 - Fax: +33 (0)2 40 09 10 97
www.manitou.com

This publication provides a description of the configuration versions and options for Manitou products, which may differ for equipment. The equipment presented in this brochure may be part of a series, as an option, or it may not be available, depending on the versions. Manitou reserves the right, at any time and without notice, to amend the specifications described and represented. The specifications provided do not bind the manufacturer. For more details, please contact your Manitou agent. This is not a contractually binding document. The presentation of the products is not contractually binding. List of specifications non-exhaustive. The logos as well as the visual identity of the company are owned by Manitou and cannot be used without authorisation. All rights reserved. The photos and diagrams contained in this brochure are only provided for consultation and information purposes.
MANITOU BF SA - Limited company with board of directors - Share capital: 39,668,399 euros - 857 802 508 RCS Nantes