Technical sheet :

MSI 35 3B - FT4

MANITOU
HANDLING YOUR WORLD

	Technical characteristics		Metric	Imperial
1.1	Manufacturer		Manitou	Manitou
1.2	Model Name		MSI 35 3B - FT4	MSI 35 3B - FT4
1.3	Power source		Diesel	Diesel
1.4	Operator type		Seated	Seated
1.5	Max. capacity	Q	3500 kg	7716 lb
1.6	Load center of gravity	c	500 mm	20 in
1.8	Load distance, centre of drive axle to fork	x	630 mm	25 in
1.9	Wheelbase	y	1800 mm	71 in
	Weight			
2.1	Service weight		4845 kg	10681 lb
2.2	Weight on front axle (laden) / rear axle (laden)		7430 kg / 915 kg	16380 lb / 2017 lb
2.3	Weight on front axle (Unladen) / rear axle (Unladen)		1730 kg / 3115 kg	3814 lb / 6867 lb
	Wheels			
3.1	Tires type		Pneumatic	Pneumatic
3.2	Dimensions of front wheels		275/70 R22,5	275/70 R22,5
3.3	Dimensions of rear wheels		7.00x12 14PR	7.00x12 14PR
3.5	Number of front wheels / rear wheels		2 / 2	2 / 2
3.5.2	Number of drive wheels		2	2
3.6	Front wheel gauge	b10	1046 mm	41 in
3.7	Rear wheel gauge	b11	1102 mm	43 in
	Dimensions			
4.8	Seat height/stand height	h7	1025 mm	40 in
4.12	Height of towing bar (coupling height)	h10	310 mm	12 in
4.19	Overall length	l1	4130 mm	163 in
4.20	Length to face of forks	l2	3030 mm	119 in
4.21	Overall width	b1	1323 mm	52 in
4.22	Forks section / width / length	s / e / l	45 mm x 125 mm x 1100 mm	2 in x 5 in x 43 in
4.23	Fork carriage ISO 2328 (class/form) A/B		3A	3A
4.24	Fork carriage width	b3	1260 mm	50 in
4.31	Ground clearance below mast	m1	270 mm	11 in
4.32	Ground clearance at centre of wheelbase	m2	260 mm	10 in
4.33	Aisle Width for pallets 1000 x 1200 crossways	Ast	4595 mm	181 in
4.34	Aisle width for 800 x 1200 pallet lengthways	Ast	4695 mm	185 in
4.35	Turning radius	Wa	2635 mm	104 in
4.36	Internal turning radius (over tyres)	b13	150 mm	6 in
	Performances			
5.1	Travel speed (laden / unladen)		20 km/h-20 km/h	12 mph-12 mph
5.2	Lifting speed (laden / unladen)		0.40 m/s-0.50 m/s	1 ft/s-2 ft/s
5.3	Lowering speed (laden / unladen)		0.40 m/s-0.30 m/s	1 ft/s-0.98 ft/s
5.5	Drawbar pull (Laden / Unladen)		2640 daN / 1560 daN	2640 daN / 1560 daN
5.7	Gradeability (laden / unladen)		29 % / 29 %	29 % / 29 %
5.10	Service brake		Hydraulic	Hydraulic
	Engine			
7.1	Engine brand / model / norm		Kubota / V2403 CR TE4 / Stage IIIB	Kubota / V2403 CR TE4 / Stage IIIB
7.2	I.C. Engine power rating		48.60 kW	48.60 kW
7.3	Rated speed		2700 rpm	2700 rpm
7.4	Number of cylinders / Capacity of cylinders		4 - 2434 cm³	4 - 149 in³
	Miscellaneous			
8.1	Type of drive control		Hydraulic	Hydraulic
8.2	Working hydraulic pressure for attachments		190 bar	2756 PSI
8.3	Oil flow rate for attachments		45 l/min	12 US gpm

MSI 35 3B - FT4 - Dimensional drawing

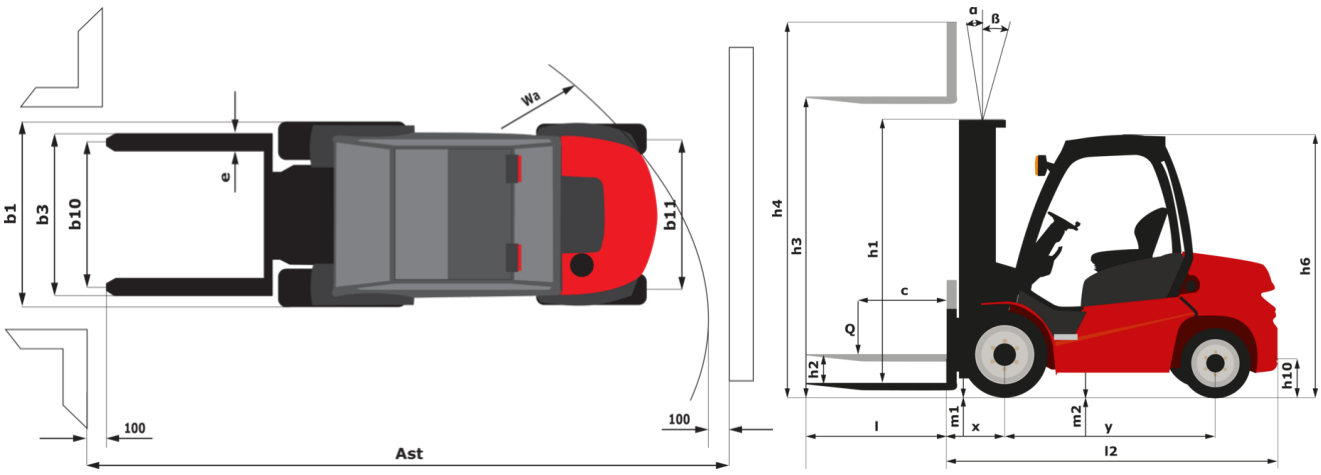

Characteristics of masts and residual capacities

Full Visibility Duplex (FVD)		FVD 30	FVD 33	FVD 35	FVD 37	FVD 40	FVD 45	FVD 50
α - Mast/fork carriage tilt, forward	°	10	10	10	10	10	10	10
β - Mast/fork carriage tilt, backward	°	12	12	12	12	12	12	12
h1 - Mast lowered height	in (mm)	84.6 (2150)	90.6 (2300)	94.5 (2400)	100.8 (2560)	108.3 (2750)	118.1 (3000)	128 (3250)
h2 - Mast free lift	in (mm)	0 (0.13)	0 (0.13)	0 (0.13)	0 (0.13)	0 (0.13)	0 (0.13)	0 (0.13)
h3 - Mast lifting height	in (mm)	118.1 (3000)	129.9 (3300)	137.8 (3500)	145.7 (3700)	157.5 (4000)	177.2 (4500)	196.9 (5000)
h4 - Mast extended height	in (mm)	153.3 (3893)	165.1 (4193)	173 (4393)	180.8 (4593)	192.6 (4893)	212.4 (5396)	230.8 (5863)
Residual capacity at max height	lb (kg)	7716 (3500)	7716 (3500)	7716 (3500)	7716 (3500)	7496 (3400)	6393 (2900)	5952 (2700)
Height at max capacity	in (mm)	98.4 (2500)	98.4 (2500)	98.4 (2500)	98.4 (2500)	98.4 (2500)	98.4 (2500)	98.4 (2500)

Free Lift Triplex (FLT)		FLT 37	FLT 40	FLT 43	FLT 47	FLT 50	FLT 55	FLT 60	FLT 65	FVD 55	FVD 60	TLL 70
α - Mast/fork carriage tilt, forward	°	10	10	10	10	10	10	10	10	10	10	10
β - Mast/fork carriage tilt, backward	°	12	12	12	12	12	12	12	12	12	12	12
h1 - Mast lowered height	in (mm)	80.7 (2050)	84.6 (2150)	90.6 (2300)	94.5 (2400)	100.8 (2560)	108.3 (2750)	118.1 (3000)	128 (3250)	137.8 (3500)	149.2 (3790)	137.8 (3500)
h2 - Mast free lift	in (mm)	77.6 (1970)	55 (1397)	60.9 (1547)	64.8 (1647)	71.1 (1807)	78.6 (1997)	88.5 (2247)	98.3 (2497)	0 (0.13)	0 (0.13)	108.1 (2747)
h3 - Mast lifting height	in (mm)	145.7 (3700)	157.5 (4000)	169.3 (4300)	185 (4700)	196.9 (5000)	216.5 (5500)	236.2 (6000)	255.9 (6500)	216.5 (5500)	236.2 (6000)	275.6 (7000)
h4 - Mast extended height	in (mm)	177.2 (4500)	189 (4800)	200.8 (5100)	216.5 (5500)	228.3 (5800)	248 (6300)	267.7 (6800)	287.4 (7300)	251.7 (6393)	271.4 (6893)	307.1 (7800)
Residual capacity at max height	lb (kg)	7496 (3400)	7496 (3400)	6614 (3000)	5732 (2600)	5952 (2700)	4850 (2200)	3968 (1800)	2646 (1200)			
Height at max capacity	in (mm)	98.4 (2500)	98.4 (2500)	98.4 (2500)	98.4 (2500)	98.4 (2500)	98.4 (2500)	98.4 (2500)	98.4 (2500)	98.4 (2500)	98.4 (2500)	98.4 (2500)

Head Office
B.P. 249 - 430 rue de l'Aubinière
44150 Ancenis Cedex - France
Tel: +33 (0)2 40 09 10 11 - Fax: +33 (0)2 40 09 10 97
www.manitou.com

This publication provides a description of the configuration versions and options for Manitou products, which may differ for equipment. The equipment presented in this brochure may be part of a series, as an option, or it may not be available, depending on the versions. Manitou reserves the right, at any time and without notice, to amend the specifications described and represented. The specifications provided do not bind the manufacturer. For more details, please contact your Manitou agent. This is not a contractually binding document. The presentation of the products is not contractually binding. List of specifications non-exhaustive. The logos as well as the visual identity of the company are owned by Manitou and cannot be used without authorisation. All rights reserved. The photos and diagrams contained in this brochure are only provided for consultation and information purposes.
MANITOU BF SA - Limited company with board of directors - Share capital: 39,668,399 euros - 857 802 508 RCS Nantes