Technical sheet :

# ME 315 C

MANITOU
HANDLING YOUR WORLD

| | Technical characteristics | | Metric | Imperial |
|---|---|---|---|---|
| 1.1 | Manufacturer | | Manitou | Manitou |
| 1.2 | Model Name | | ME 315c | ME 315c |
| 1.3 | Power source | | Electrical | Electrical |
| 1.4 | Operator type | | Sitting | Sitting |
| 1.5 | Max. capacity | Q | 1500 kg | 3307 lb |
| 1.6 | Load center of gravity | c | 500 mm | 20 in |
| 1.8 | Load distance, centre of drive axle to fork | x | 365 mm | 14 in |
| 1.9 | Wheelbase | y | 1220 mm | 48 in |
| | **Weight** | | | |
| 2.1 | Service weight | | 3000 kg | 6614 lb |
| 2.2 | Weight on front axle (laden) / rear axle (laden) | | 3930 kg / 570 kg | 8664 lb / 1257 lb |
| 2.3 | Weight on front axle (Unladen) / rear axle (Unladen) | | 1370 kg / 1630 kg | 3020 lb / 3594 lb |
| | **Wheels** | | | |
| 3.1 | Tires type | | Super Elastic | Super Elastic |
| 3.2 | Dimensions of front wheels | | 18x7-8 | 18x7-8 |
| 3.3 | Dimensions of rear wheels | | 200/50-10 | 200/50-10 |
| 3.5 | Number of front wheels / rear wheels | | 2 / 1 | 2 / 1 |
| 3.5.2 | Number of drive wheels | | 1 | 1 |
| 3.6 | Front wheel gauge | b10 | 835 mm | 33 in |
| | **Dimensions** | | | |
| 4.7 | Height of overhead guard (cabin) | h6 | 2105 mm | 83 in |
| 4.8 | Seat height/stand height | h7 | 1020 mm | 40 in |
| 4.12 | Height of towing bar (coupling height) | h10 | 500 mm | 20 in |
| 4.19 | Overall length | l1 | 3015 mm | 119 in |
| 4.20 | Length to face of forks | l2 | 1865 mm | 73 in |
| 4.21 | Overall width | b1 | 990 mm | 39 in |
| 4.22 | Forks section / width / length | s / e / l | 35 mm x 100 mm x 1150 mm | 1 in x 4 in x 45 in |
| 4.23 | Fork carriage ISO 2328 (class/form) A/B | | 2A | 2A |
| 4.24 | Fork carriage width | b3 | 1000 mm | 39 in |
| 4.31 | Ground clearance below mast | m1 | 100 mm | 4 in |
| 4.32 | Ground clearance at centre of wheelbase | m2 | 100 mm | 4 in |
| 4.33 | Aisle Width for pallets 1000 x 1200 crossways | Ast | 3201 mm | 126 in |
| 4.34 | Aisle width for 800 x 1200 pallet lengthways | Ast | 3325 mm | 131 in |
| 4.35 | Turning radius | Wa | 1510 mm | 59 in |
| | **Performances** | | | |
| 5.1 | Travel speed (laden / unladen) | | 9.50 km/h-10.50 km/h | 6 mph-7 mph |
| 5.2 | Lifting speed (laden / unladen) | | 0.22 m/s-0.34 m/s | 0.72 ft/s-1 ft/s |
| 5.3 | Lowering speed (laden / unladen) | | 0.58 m/s-0.48 m/s | 2 ft/s-2 ft/s |
| 5.5 | Drawbar pull (Laden / Unladen) | | 500 daN / 530 daN | 500 daN / 530 daN |
| 5.7 | Gradeability (laden / unladen) | | 7 % / 9 % | 7 % / 9 % |
| 5.10 | Service brake | | Hydraulic | Hydraulic |
| | **Engine** | | | |
| 6.1 | Drive motor rating S2 60 min | | 4 kW | 4 kW |
| 6.3 | Battery according to DIN 43531/35/36 A, B, C | | DIN43535 A | DIN43535 A |
| 6.4 | Battery voltage / capacity | | 24 V / 840 Ah | 24 V / 840 Ah |
| 6.6 | Energy consumption | | 3.50 kWh | 3.50 kWh |
| 7.2 | Engine power according to ISO 1585 | | 8.60 kW | 8.60 kW |
| | **Miscellaneous** | | | |
| 8.1 | Type of drive control | | Electric | Electric |
| 8.2 | Working hydraulic pressure for attachments | | 145 bar | 2103 PSI |
| 8.3 | Oil flow rate for attachments | | 16 l/min | 4 US gpm |
| 8.4 | Measured/guaranteed mean noise level at the ear of the operator | | < 70 dB | < 70 dB |
| 8.4 | Sound level at the driver's ear according to DIN 12 053 | | 40 dB | 40 dB |

## ME 315 C - Dimensional drawing

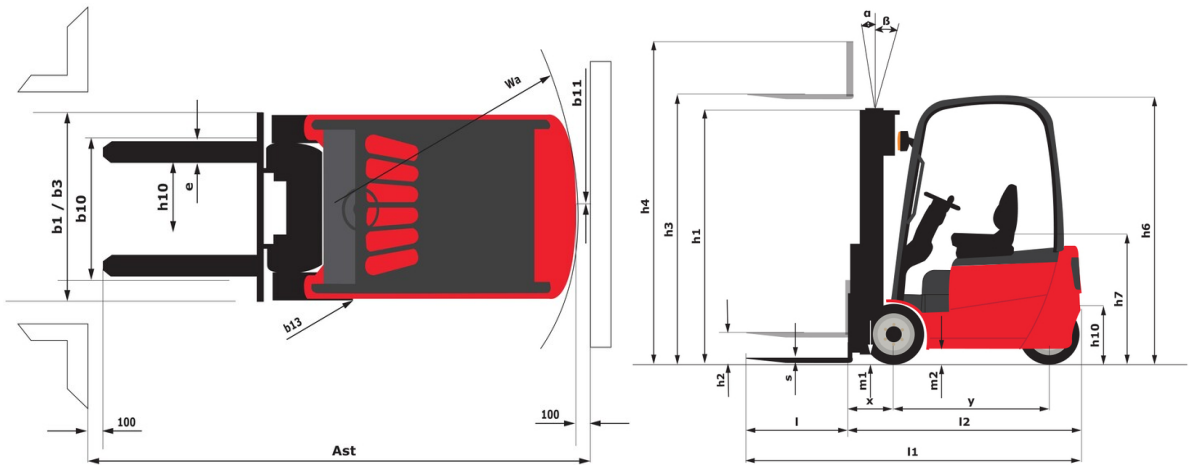

# Characteristics of masts and residual capacities

| Full Visibility Duplex (FVD) | | FVD 27 | FVD 30 | FVD 33 | FVD 36 | FVD 40 | FVD 43 | FVD 45 |
|---|---|---|---|---|---|---|---|---|
| Mast/fork carriage tilt, forward | ° | 6 | 6 | 6 | 6 | 3.50 | 3.50 | 3.50 |
| Mast/fork carriage tilt, backward | ° | 5 | 5 | 5 | 5 | 5 | 5 | 5 |
| h1 - Mast lowered height | in (mm) | 72 (1830) | 78 (1980) | 83.9 (2130) | 91.7 (2330) | 101.6 (2580) | 107.5 (2730) | 111.4 (2830) |
| h2 - Mast free lift | in (mm) | 6.1 (155) | 6.1 (155) | 6.1 (155) | 6.1 (155) | 6.1 (155) | 6.1 (155) | 6.1 (155) |
| h3 - Mast lifting height | in (mm) | 106.3 (2700) | 118.1 (3000) | 129.9 (3300) | 141.7 (3600) | 157.5 (4000) | 169.3 (4300) | 177.2 (4500) |
| h4 - Mast extended height | in (mm) | 127.3 (3233) | 139.1 (3533) | 150.9 (3833) | 162.7 (4133) | 178.5 (4533) | 190.3 (4833) | 198.1 (5033) |
| Residual capacity at max height | lb (kg) | 3307 (1500) | 3307 (1500) | 3307 (1500) | 3307 (1500) | 3307 (1500) | 3307 (1500) | 3197 (1450) |
| Residual capacity with integrated side shift at max heigth | lb (kg) | 3307 (1500) | 3307 (1500) | 3307 (1500) | 3307 (1500) | 3307 (1500) | 3307 (1500) | 3197 (1450) |
| Residual capacity with hooked-on side shift at max heigth | lb (kg) | 3307 (1500) | 3307 (1500) | 3307 (1500) | 3307 (1500) | 3197 (1450) | 3086 (1400) | 2976 (1350) |
| Height at max capacity | in (mm) | 106.3 (2700) | 118.1 (3000) | 129.9 (3300) | 141.7 (3600) | 157.5 (4000) | 169.3 (4300) | 157.5 (4000) |
| Height at max capacity with integrated sideshift | in (mm) | 106.3 (2700) | 118.1 (3000) | 129.9 (3300) | 141.7 (3600) | 157.5 (4000) | 169.3 (4300) | 157.5 (4000) |

| Free Lift Duplex (FLD) | | FLD 27 | FLD 30 | FLD 33 | FLD 36 | FLD 40 |
|---|---|---|---|---|---|---|
| Mast/fork carriage tilt, forward | ° | 6 | 6 | 6 | 6 | 3.50 |
| Mast/fork carriage tilt, backward | ° | 5 | 5 | 5 | 6 | 5 |
| h1 - Mast lowered height | in (mm) | 72.6 (1845) | 78.5 (1995) | 84.4 (2145) | 90.4 (2295) | 100.2 (2545) |
| h2 - Mast free lift | in (mm) | 50.6 (1286) | 56.5 (1436) | 62.4 (1586) | 68.3 (1736) | 78.2 (1986) |
| h3 - Mast lifting height | in (mm) | 106.3 (2700) | 118.1 (3000) | 129.9 (3300) | 141.7 (3600) | 157.5 (4000) |
| h4 - Mast extended height | in (mm) | 128.3 (3259) | 140.1 (3559) | 151.9 (3859) | 163.7 (4159) | 179.5 (4559) |
| Residual capacity at max height | lb (kg) | 3307 (1500) | 3307 (1500) | 3307 (1500) | 3307 (1500) | 3307 (1500) |
| Residual capacity with integrated side shift at max heigth | lb (kg) | 3307 (1500) | 3307 (1500) | 3307 (1500) | 3307 (1500) | 3307 (1500) |
| Residual capacity with hooked-on side shift at max heigth | lb (kg) | 3307 (1500) | 3307 (1500) | 3307 (1500) | 3307 (1500) | 3197 (1450) |
| Height at max capacity | in (mm) | 106.3 (2700) | 118.1 (3000) | 129.9 (3300) | 141.7 (3600) | 157.5 (4000) |
| Height at max capacity with integrated sideshift | in (mm) | 106.3 (2700) | 118.1 (3000) | 129.9 (3300) | 141.7 (3600) | 157.5 (4000) |

| Free Lift Triplex (FLT) | | FLT 40 | FLT 43 | FLT 45 | FLT 48 | FLT 50 | FLT 55 | FLT 60 | FLT 65 |
|---|---|---|---|---|---|---|---|---|---|
| Mast/fork carriage tilt, forward | ° | 3.50 | 3.50 | 3.50 | 3.50 | 3.50 | 3.50 | 3.50 | 3.50 |
| Mast/fork carriage tilt, backward | ° | 5 | 5 | 5 | 5 | 5 | 5 | 5 | 5 |
| h1 - Mast lowered height | in (mm) | 76.6 (1945) | 80.5 (2045) | 82.5 (2095) | 88.4 (2245) | 92.3 (2345) | 100.2 (2545) | 110 (2795) | 117.9 (2995) |
| h2 - Mast free lift | in (mm) | 54 (1371) | 57.9 (1471) | 59.9 (1521) | 65.8 (1671) | 69.7 (1771) | 77.6 (1971) | 86.6 (2200) | 94.5 (2400) |
| h3 - Mast lifting height | in (mm) | 157.5 (4000) | 169.3 (4300) | 177.2 (4500) | 189 (4800) | 196.9 (5000) | 216.5 (5500) | 236.2 (6000) | 255.9 (6500) |
| h4 - Mast extended height | in (mm) | 180.5 (4584) | 192.3 (4884) | 200.2 (5084) | 212 (5384) | 219.8 (5584) | 239.5 (6084) | 260 (6605) | 279.7 (7105) |
| Residual capacity at max height | lb (kg) | 3197 (1450) | 3086 (1400) | 2976 (1350) | 2866 (1300) | 2756 (1250) | 2646 (1200) | 2205 (1000) | 1323 (600) |
| Residual capacity with integrated side shift at max heigth | lb (kg) | 3197 (1450) | 3086 (1400) | 2976 (1350) | 2866 (1300) | 2756 (1250) | 2646 (1200) | 2205 (1000) | 1323 (600) |
| Residual capacity with hooked-on side shift at max heigth | lb (kg) | 2976 (1350) | 2866 (1300) | 2756 (1250) | 2646 (1200) | 2535 (1150) | 2425 (1100) | 1984 (900) | 1102 (500) |
| Height at max capacity | in (mm) | 98.4 (2500) | 169.3 (4300) | 98.4 (2500) | 98.4 (2500) | 98.4 (2500) | 98.4 (2500) | 98.4 (2500) | 98.4 (2500) |

**Head Office**
B.P. 249 - 430 rue de l'Aubinière
44150 Ancenis Cedex - France
Tel: +33 (0)2 40 09 10 11 - Fax: +33 (0)2 40 09 10 97
www.manitou.com

This publication provides a description of the configuration versions and options for Manitou products, which may differ for equipment. The equipment presented in this brochure may be part of a series, as an option, or it may not be available, depending on the versions. Manitou reserves the right, at any time and without notice, to amend the specifications described and represented. The specifications provided do not bind the manufacturer. For more details, please contact your Manitou agent. This is not a contractually binding document. The presentation of the products is not contractually binding. List of specifications non-exhaustive. The logos as well as the visual identity of the company are owned by Manitou and cannot be used without authorisation. All rights reserved. The photos and diagrams contained in this brochure are only provided for consultation and information purposes.
MANITOU BF SA - Limited company with board of directors - Share capital: 39,668,399 euros - 857 802 508 RCS Nantes