Technical sheet :

MSI 35 ST5

MANITOU
HANDLING YOUR WORLD

	Technical characteristics		Metric	Imperial
1.1	Manufacturer		Manitou	Manitou
1.2	Model Name		MSI 35 ST5	MSI 35 ST5
1.3	Power source		Diesel	Diesel
1.4	Operator type		Seated	Seated
1.5	Max. capacity	Q	3500 kg	7716 lb
1.6	Load center of gravity	c	500 mm	20 in
1.8	Load distance, centre of drive axle to fork	x	631 mm	25 in
1.9	Wheelbase	y	1900 mm	75 in
	Weight			
2.1	Service weight		4780 kg	10538 lb
2.2	Weight on front axle (laden) / rear axle (laden)		7350 kg / 850 kg	16204 lb / 1874 lb
2.3	Weight on front axle (Unladen) / rear axle (Unladen)		1710 kg / 3070 kg	3770 lb / 6768 lb
	Wheels			
3.1	Tires type		Pneumatic	Pneumatic
3.2	Dimensions of front wheels		300-15/18 6T P43	300-15/18 6T P43
3.3	Dimensions of rear wheels		7.00-12/12 ED PLUS	7.00-12/12 ED PLUS
3.5	Number of front wheels / rear wheels		2 / 2	2 / 2
3.5.2	Number of drive wheels		2	2
3.6	Front wheel gauge	b10	1044 mm	41 in
3.7	Rear wheel gauge	b11	1108 mm	44 in
	Dimensions			
4.7	Height of overhead guard (cabin)	h6	2095 mm	82 in
4.8	Seat height/stand height	h7	972 mm	38 in
4.19	Overall length	l1	4289 mm	169 in
4.20	Length to face of forks	l2	3139 mm	124 in
4.21	Overall width	b1	1330 mm	52 in
4.22	Forks section / width / length	s / e / l	45 mm x 125 mm x 1200 mm	2 in x 5 in x 47 in
4.23	Fork carriage ISO 2328 (class/form) A/B		3A	3A
4.24	Fork carriage width	b3	1260 mm	50 in
4.31	Ground clearance below mast	m1	260 mm	10 in
4.32	Ground clearance at centre of wheelbase	m2	238 mm	9 in
4.33	Aisle Width for pallets 1000 x 1200 crossways	Ast	4711 mm	185 in
4.35	Turning radius	Wa	2680 m	8792 ft 8 in
	Performances			
5.1	Travel speed (laden / unladen)		21 km/h-21 km/h	13 mph-13 mph
5.2	Lifting speed (laden / unladen)		0.50 m/s-0.50 m/s	2 ft/s-2 ft/s
5.3	Lowering speed (laden / unladen)		0.50 m/s-0.30 m/s	2 ft/s-0.98 ft/s
5.5	Drawbar pull (Laden)		1900 daN	1900 daN
5.7	Gradeability (laden)		24 %	24 %
5.10	Service brake		Hydraulic brakes by loss of pressure	Hydraulic brakes by loss of pressure
	Engine			
7.1	Engine brand / model		Kubota / D1803 CRT E5B	Kubota / D1803 CRT E5B
7.2	Engine power according to ISO 1585		37 kW	37 kW
7.3	Rated speed		2700 rpm	2700 rpm
7.4	Number of cylinders / Capacity of cylinders		3 - 1826 cm³	3 - 111 in³
	Miscellaneous			
8.1	Type of drive control		Electronic	Electronic
8.2	Working hydraulic pressure for attachments		230 bar	3336 PSI
8.3	Oil flow rate for attachments		45 l/min	12 US gpm
8.4	Sound level at the driver's ear according to DIN 12 053		81 dB	81 dB

MSI 35 ST5 - Dimensional drawing

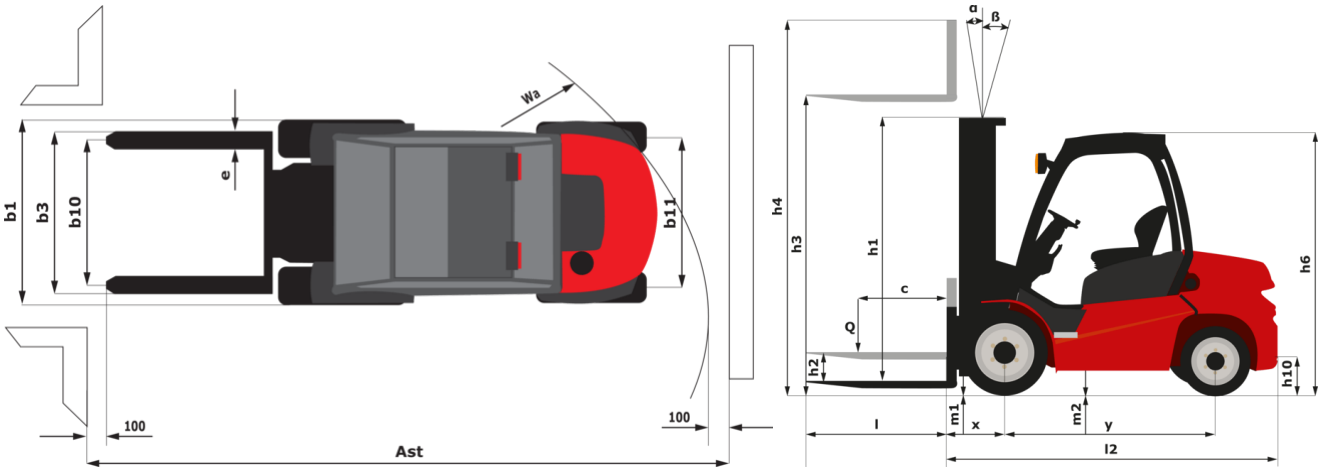

Characteristics of masts and residual capacities

Full Visibility Duplex (FVD)		FVD 30	FVD 33	FVD 37	FVD 40	FVD 45
Mast/fork carriage tilt, forward	°	12	12	12	12	12
Mast/fork carriage tilt, backward	°	10	10	10	10	10
h1 - Mast lowered height	in (mm)	84.1 (2136)	90 (2286)	100.2 (2546)	107.7 (2736)	117.6 (2986)
h2 - Mast free lift	in (mm)	3.5 (90)	3.5 (90)	3.5 (90)	3.5 (90)	3.5 (90)
h3 - Mast lifting height	in (mm)	118.1 (3000)	129.9 (3300)	145.7 (3700)	157.5 (4000)	177.2 (4500)
h4 - Mast extended height	in (mm)	147.2 (3738)	159 (4038)	174.7 (4438)	186.5 (4738)	206.2 (5238)
Residual capacity at max height	lb (kg)	7716 (3500)	7716 (3500)	7716 (3500)	7716 (3500)	7716 (3500)
Residual capacity with hooked-on side shift at max heigth	lb (kg)	7716 (3500)	7716 (3500)	7716 (3500)	7716 (3500)	7716 (3500)
Height at max capacity	in (mm)	118.1 (3000)	129.9 (3300)	145.7 (3700)	157.5 (4000)	177.2 (4500)
Height at max capacity with hooked-on sideshift	in (mm)	118.1 (3000)	129.9 (3300)	145.7 (3700)	157.5 (4000)	177.2 (4500)

Free Lift Triplex (FLT)		FLT 34	FLT 37	FLT 40	FLT 43	FLT 47	FLT 55	FLT 60
Mast/fork carriage tilt, forward	°	12	12	12	12	12	6	6
Mast/fork carriage tilt, backward	°	10	10	10	10	10	6	6
h1 - Mast lowered height	in (mm)	76.2 (1936)	80.2 (2036)	84.1 (2136)	90 (2286)	93.9 (2386)	107.7 (2736)	117.6 (2986)
h2 - Mast free lift	in (mm)	47.6 (1208)	51.5 (1308)	55.4 (1408)	61.3 (1558)	65.3 (1658)	79.1 (2008)	88.9 (2258)
h3 - Mast lifting height	in (mm)	133.9 (3400)	145.7 (3700)	157.5 (4000)	169.3 (4300)	185 (4700)	216.5 (5500)	236.2 (6000)
h4 - Mast extended height	in (mm)	164.7 (4184)	176.5 (4484)	188.3 (4784)	200.2 (5084)	215.9 (5484)	247.4 (6284)	267.1 (6784)
Residual capacity at max height	lb (kg)	7716 (3500)	7716 (3500)	7716 (3500)	5732 (2600)	3968 (1800)		
Residual capacity with hooked-on side shift at max heigth	lb (kg)	7716 (3500)	7716 (3500)	7716 (3500)	7055 (3200)	3968 (1800)		
Height at max capacity	in (mm)	133.9 (3400)	145.7 (3700)	157.5 (4000)	157.5 (4000)	137.8 (3500)	98.4 (2500)	98.4 (2500)
Height at max capacity with hooked-on sideshift	in (mm)	133.9 (3400)	145.7 (3700)	157.5 (4000)	157.5 (4000)	137.8 (3500)		

Head Office
B.P. 249 - 430 rue de l'Aubinière
44150 Ancenis Cedex - France
Tel: +33 (0)2 40 09 10 11 - Fax: +33 (0)2 40 09 10 97
www.manitou.com

This publication provides a description of the configuration versions and options for Manitou products, which may differ for equipment. The equipment presented in this brochure may be part of a series, as an option, or it may not be available, depending on the versions. Manitou reserves the right, at any time and without notice, to amend the specifications described and represented. The specifications provided do not bind the manufacturer. For more details, please contact your Manitou agent. This is not a contractually binding document. The presentation of the products is not contractually binding. List of specifications non-exhaustive. The logos as well as the visual identity of the company are owned by Manitou and cannot be used without authorisation. All rights reserved. The photos and diagrams contained in this brochure are only provided for consultation and information purposes.
MANITOU BF SA - Limited company with board of directors - Share capital: 39,668,399 euros - 857 802 508 RCS Nantes