Technical sheet :

MC 25-2 ST5

MANITOU
HANDLING YOUR WORLD

	Technical characteristics		Metric	Imperial
1.1	Manufacturer		Manitou	Manitou
1.2	Model Name		MC 25-2 ST5	MC 25-2 ST5
1.3	Power source		Diesel	Diesel
1.4	Operator type		Seated	Seated
1.5	Max. capacity	Q	2500 kg	5512 lb
1.6	Load center of gravity	c	500 mm	20 in
1.8	Load distance, centre of drive axle to fork	x	621 mm	24 in
1.9	Wheelbase	y	1900 mm	75 in
	Weight			
2.1	Service weight		4200 kg	9259 lb
2.2	Weight on front axle (laden) / rear axle (laden)		5970 kg / 730 kg	13162 lb / 1609 lb
2.3	Weight on front axle (Unladen) / rear axle (Unladen)		1820 kg / 2380 kg	4012 lb / 5247 lb
	Wheels			
3.1	Tires type		Pneumatic	Pneumatic
3.2	Dimensions of front wheels		12,5/80-18/12 SL R4	12,5/80-18/12 SL R4
3.3	Dimensions of rear wheels		7.00-12/12 ED PLUS	7.00-12/12 ED PLUS
3.5	Number of front wheels / rear wheels		2 / 2	2 / 2
3.5.2	Number of drive wheels		2	2
3.6	Front wheel gauge	b10	1159 mm	46 in
3.7	Rear wheel gauge	b11	1112 mm	44 in
	Dimensions			
4.7	Height of overhead guard (cabin) / Overall height of low overhead guard (Buggie version)	h6 / h6*	2155 mm / 1990 mm	85 in / 78 in
4.8	Seat height/stand height	h7	1034 mm	41 in
4.19	Overall length	l1	4195 mm	165 in
4.20	Length to face of forks	l2	3045 mm	120 in
4.21	Overall width	b1	1450 mm	57 in
4.22	Forks section x width x length	s / e / l	40 mm x 100 mm / 1200 mm	2 in x 4 in / 47 in
4.23	Fork carriage ISO 2328 (class/form) A/B		2A	2A
4.24	Fork carriage width	b3	1260 mm	50 in
4.31	Ground clearance below mast	m1	300 mm	12 in
4.32	Ground clearance at centre of wheelbase	m2	320 mm	13 in
4.35	Turning radius	Wa	2620 mm	103 in
	Performances			
5.1	Travel speed (laden / unladen)		12 km/h / 24.50 km/h	7 mph / 15 mph
5.2	Lifting speed (laden / unladen)		0.47 m/s / 0.46 m/s	2 ft/s / 2 ft/s
5.3	Lowering speed (laden / unladen)		0.50 m/s / 0.30 m/s	2 ft/s / 0.98 ft/s
5.5	Drawbar pull (Laden / Unladen)		1700 daN / 910 daN	1700 daN / 910 daN
5.7	Gradeability (laden)		29 %	29 %
5.10	Service brake		Hydraulic brakes by loss of pressure	Hydraulic brakes by loss of pressure
	Engine			
7.2	Engine power according to ISO 1585		37 kW	37 kW
7.1	Engine brand / model / norm		Kubota / D1803 CRT E5B / Stage V	Kubota / D1803 CRT E5B / Stage V
7.2	Engine power according to ISO 1585		37 kW	37 kW
7.3	Rated speed		2700 rpm	2700 rpm
7.4	Number of cylinders / Capacity of cylinders		3 - 1826 cm³	3 - 111 in³
	Miscellaneous			
8.1	Type of drive control		Electronic	Electronic
8.2	Working hydraulic pressure for attachments		200 bar	2901 PSI
8.3	Oil flow rate for attachments		42 l/min	11 US gpm

MC 25-2 ST5 - Dimensional drawing

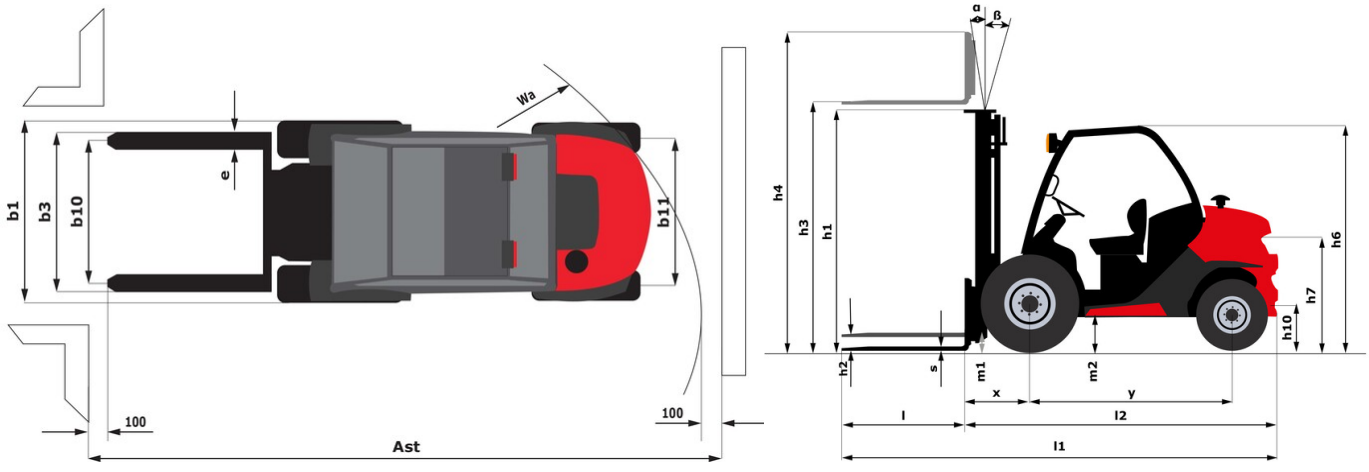

Characteristics of masts and residual capacities

Full Visibility Duplex (FVD)		FVD 33	FVD 37	FVD 45
Mast/fork carriage tilt, forward	°	12	12	12
Mast/fork carriage tilt, backward	°	10	10	10
h1 - Mast lowered height	in (mm)	92 (2338)	102.3 (2598)	119.6 (3038)
h2 - Mast free lift	in (mm)	4.4 (112)	4.4 (112)	4.4 (112)
h3 - Mast lifting height	in (mm)	129.9 (3300)	145.7 (3700)	177.2 (4500)
h4 - Mast extended height	in (mm)	161 (4090)	176.8 (4490)	208.3 (5290)
Residual capacity at max height	lb (kg)	5512 (2500)	3197 (1450)	1764 (800)
Residual capacity with hooked-on side shift at max heigth	lb (kg)	5512 (2500)	3197 (1450)	1764 (800)
Height at max capacity	in (mm)	118.1 (3000)	118.1 (3000)	118.1 (3000)
Height at max capacity with hooked-on sideshift	in (mm)	118.1 (3000)	118.1 (3000)	118.1 (3000)

Free Lift Triplex (FLT)		FLT 34	FLT 37	FLT 40	FLT 43	FLT 47	FLT 55
Mast/fork carriage tilt, forward	°	12	12	12	12	12	6
Mast/fork carriage tilt, backward	°	10	10	10	10	10	6
h1 - Mast lowered height	in (mm)	78.3 (1988)	82.2 (2088)	86.1 (2188)	92 (2338)	96 (2438)	109.8 (2788)
h2 - Mast free lift	in (mm)	47.6 (1210)	51.6 (1310)	55.5 (1410)	59.4 (1510)	65.4 (1660)	75.6 (1920)
h3 - Mast lifting height	in (mm)	133.9 (3400)	145.7 (3700)	157.5 (4000)	169.3 (4300)	185 (4700)	216.5 (5500)
h4 - Mast extended height	in (mm)	166.8 (4236)	178.6 (4536)	190.4 (4836)	203.5 (5168)	218 (5536)	252.3 (6408)
Residual capacity at max height	lb (kg)	4189 (1900)	3307 (1500)	2976 (1350)	1764 (800)	1543 (700)	1102 (500)
Residual capacity with hooked-on side shift at max heigth	lb (kg)	3968 (1800)	3197 (1450)	2976 (1350)	1543 (700)	1543 (700)	1102 (500)
Height at max capacity	in (mm)	118.1 (3000)	114.2 (2900)	118.1 (3000)	118.1 (3000)	118.1 (3000)	118.1 (3000)
Height at max capacity with hooked-on sideshift	in (mm)	118.1 (3000)	118.1 (3000)	118.1 (3000)	118.1 (3000)	118.1 (3000)	118.1 (3000)

Full Visibility Triplex (FVT)		FVT 33
Mast/fork carriage tilt, forward	°	12
Mast/fork carriage tilt, backward	°	10
h1 - Mast lowered height	in (mm)	73.9 (1878)
h2 - Mast free lift	in (mm)	4.9 (124)
h3 - Mast lifting height	in (mm)	129.9 (3300)
h4 - Mast extended height	in (mm)	160.6 (4079)
Height at max capacity	in (mm)	98.4 (2500)

Head Office
B.P. 249 - 430 rue de l'Aubinière
44150 Ancenis Cedex - France
Tel: +33 (0)2 40 09 10 11 - Fax: +33 (0)2 40 09 10 97
www.manitou.com

This publication provides a description of the configuration versions and options for Manitou products, which may differ for equipment. The equipment presented in this brochure may be part of a series, as an option, or it may not be available, depending on the versions. Manitou reserves the right, at any time and without notice, to amend the specifications described and represented. The specifications provided do not bind the manufacturer. For more details, please contact your Manitou agent. This is not a contractually binding document. The presentation of the products is not contractually binding. List of specifications non-exhaustive. The logos as well as the visual identity of the company are owned by Manitou and cannot be used without authorisation. All rights reserved. The photos and diagrams contained in this brochure are only provided for consultation and information purposes.
MANITOU BF SA - Limited company with board of directors - Share capital: 39,668,399 euros - 857 802 508 RCS Nantes