Technical sheet :

2600R

MANITOU
HANDLING YOUR WORLD

Capacities		Metric	Imperial
Rated Operating Capacity		1179 kg	2599 lb
Rated Operating Capacity with Optional Counterweight		1261 kg	2780 lb
Unladen weight		3719 kg	8199 lb
Weight and dimensions			
Overall Operating Height - Fully Raised	h27	4089 mm	161 in
Height to Hinge Pin – Fully Raised	h28	3124 mm	123 in
Overall Height to top of ROPS	h17	2057 mm	81 in
Dump angle at full height	a5	40 °	40 °
Dump height	h29	2488 mm	98 in
Overall length with bucket	l16	3632 mm	143 in
Dump reach - Full height	r6	686 mm	27 in
Rollback at ground	a13	28 °	28 °
Seat to ground height	h30	1016 mm	40 in
Wheelbase	y	1257 mm	49 in
Overall width less bucket	b1	1664 mm	66 in
Bucket Width	e1	203 mm	8 in
Ground clearance	m4	203 mm	8 in
Overall length - Less Bucket	l2	2832 mm	111 in
Departure angle	a2	25 °	25 °
Clearance Radius - Front with Bucket	b18	2286 mm	90 in
Clearance Circle - Front without Bucket	b19	1422 mm	56 in
Clearance Circle - Rear	wa1	1626 mm	64 in
Performances			
Travel Speed with Two-Speed Option - Maximum		19.20 km/h	12 mph
Travel speed (unladen)		12.90 km/h	8 mph
Wheels			
Standard tires		12.00x16.5 HD	12.00x16.5 HD
Engine			
Engine brand		Yanmar	Yanmar
Engine model		4TNV98CT-NMS	4TNV98CT-NMS
Gross Power		53.70 kW	53.70 kW
Net Power		52.70 kW	52.70 kW
Max. torque / Engine rotation		294 Nm / 2500 rpm	217 ft/lbs / 2500 rpm
Power source		Diesel	Diesel
I.C. Engine power rating		72 Hp	72 Hp
Battery voltage		12 V	12 V
Alternator		95 kW	95 kW
Starter		3 kW	3 kW
Hydraulics			
Standard flow - Auxiliary hydraulics		90.10 l/min	24 US gpm
Auxiliary Hydraulic Pressure		227.50 bar	3300 PSI
High-Flow Auxiliary Hydraulics – Option		132.50 l/min	35 US gpm
High-Flow Auxiliary Hydraulics Pressure – Option		220.60 bar	3200 PSI
Tank capacities			
Fuel tank		81.40 l	22 US gal
Reservoir Capacity Hydraulics		30.30 l	8 US gal
Displacement		3.30 l	0.87 US gal
Noise and vibration			
Noise to environment (LwA)		101 dB	101 dB
Noise at driving position (LpA)		85 dB	85 dB
Whole-Body Vibration (ISO 2631-1)		0.96 m/s²	0.96 m/s²
Vibration to whole hand/arm		< 1.50 m/s²	< 1.50 m/s²

2600R - Dimensional drawing

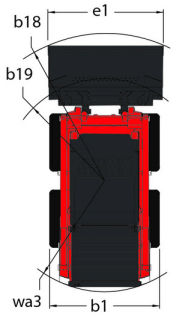

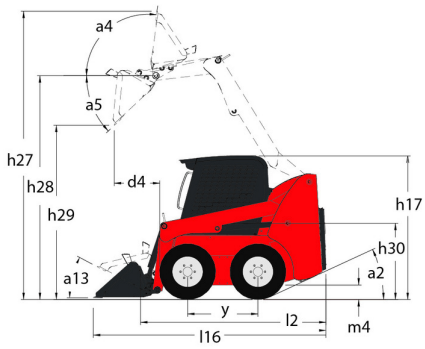

Equipment

—	
Integral Access Plate (removable)	Standard
Lifting function	
All-Tach® Attachment Mounting System	Standard
Auxiliary Hydraulics	Standard
High-Flow Auxiliary Hydraulics	Optional
Power-A-Tach® Attachment Mounting System	Optional
Lighting	
Work Lights - Front and Rear	Standard
Motorization/Power	
Engine Auto-Shutdown System	Standard
Engine Block Heater	Optional
Turbo-Charged Engine	Standard
Two-Speed Drive	Optional
Operator station	
Adjustable Arm Rests / Control Towers 1	Standard
Air conditioning with manual adjustment	Optional
Air suspension seat	Optional
Cab Enclosure	Optional
Dual-Hand Controls	Optional
Foot and Hand Throttles 2	Standard
Gehl T-Bar Controls	Optional
Hand/Foot Controls	Optional
Heating	Optional
High-Back Adjustable Seat	Standard
Horn	Standard
Joystick controls	Optional
ROPS/FOPS Level II Overhead Guard	Standard
Sound Reduction Material	Standard
Suspension Seat - Mechanical	Optional
Other options	
Hydrostatic Drive - Servo	Standard
Selectable Self-Leveling Hydraulic Lift Action 4	Optional
Secondary functions	
Counterweight	Optional
Full Instrumentation	Standard
Hydraglide™ Ride Control 3	Optional
Security	
Back-Up Alarm	Standard
Brake Control (Auto / Manual)	Standard
Hydraloc™ Safety System	Standard
Lift Arm Support Device	Standard
Operator Restraint Bar	Standard

Head Office
B.P. 249 - 430 rue de l'Aubinière
44150 Ancenis Cedex - France
Tel: +33 (0)2 40 09 10 11 - Fax: +33 (0)2 40 09 10 97
www.manitou.com

This publication provides a description of the configuration versions and options for Manitou products, which may differ for equipment. The equipment presented in this brochure may be part of a series, as an option, or it may not be available, depending on the versions. Manitou reserves the right, at any time and without notice, to amend the specifications described and represented. The specifications provided do not bind the manufacturer. For more details, please contact your Manitou agent. This is not a contractually binding document. The presentation of the products is not contractually binding. List of specifications non-exhaustive. The logos as well as the visual identity of the company are owned by Manitou and cannot be used without authorisation. All rights reserved. The photos and diagrams contained in this brochure are only provided for consultation and information purposes.
MANITOU BF SA - Limited company with board of directors - Share capital: 39,668,399 euros - 857 802 508 RCS Nantes