Technical sheet :

MXT 840 P

MANITOU
HANDLING YOUR WORLD

Capacities		Metric	Imperial
Max. capacity		4000 kg	8818 lb
Max. lifting height		7.60 m	24 ft 11 in
Max. outreach		4.23 m	13 ft 11 in
Weight and dimensions			
Overall length to carriage	l11	4.67 m	15 ft 4 in
Length to face of forks	l2	4.85 m	15 ft 11 in
Overall width	b1	2.38 m	7 ft 10 in
Overall height	h17	2.59 m	8 ft 6 in
Wheelbase	y	2.58 m	8 ft 6 in
Ground clearance	m4	0.38 m	1 ft 3 in
Overall cab width	b4	0.85 m	2 ft 9 in
Tilt-up angle	a4	12 °	12 °
Tilt-down angle	a5	134 °	134 °
External turning radius (over tyres)	Wa1	3.90 m	12 ft 10 in
Unladen weight (with forks)		8260 kg	18210 lb
Overall weight		8140 kg	17946 lb
Tires type		Inflatable	Inflatable
Standard tires		BKT 16.0/70-20 14PR- EM936 SPL	BKT 16.0/70-20 14PR- EM936 SPL
Forks length / width / section	l / e / s	1200 mm x 125 mm / 50 mm	47 in x 5 in / 2 in
Performances			
Lifting		13 s	13 s
Lowering		9 s	9 s
Extension		9 s	9 s
Retraction		6.10 s	6.10 s
Crowd		4.30 s	4.30 s
Dump		3.20 s	3.20 s
Engine			
Engine brand		Perkins	Perkins
Engine norm		Stage IIIA	Stage IIIA
Max. fuel sulphur content		5000 ppm	5000 ppm
Engine model		1104D-44T	1104D-44T
Number of cylinders / Capacity of cylinders		4 - 4400 cm³	4 - 269 in³
I.C. Engine power rating - Power		94 Hp / 70 kW	94 Hp / 70 kW
Max. torque / Engine rotation		392 Nm @ 1400 rpm	289 ft/lbs @ 1400 rpm
Drawbar pull		7800 daN	7800 daN
Drawbar pull (Laden)		7800 daN	7800 daN
Transmission			
Transmission type		Torque converter	Torque converter
Number of gears (forward / reverse)		4 / 4	4 / 4
Max. travel speed		28 km/h	17 mph
Parking brake		Oil-Immersed Multi-Disc Braking front and rear Axle	Oil-Immersed Multi-Disc Braking front and rear Axle
Service brake		Hydraulic rear & front	Hydraulic rear & front
Hydraulics			
Hydraulic pump type		Gear pump	Gear pump
Hydraulic flow / Pressure		86.40 l/min-250 bar	23 US gpm-3626 PSI
Tank capacities			
Engine oil		11.50 l	3 US gal
Hydraulic oil		120 l	32 US gal
Fuel tank		78.50 l	21 US gal
Noise and vibration			
Noise at driving position (LpA)		92 dB	92 dB
Noise to environment (LwA)		110 dB	110 dB
Vibration on hands/arms		< 2.50 m/s²	< 2.50 m/s²
Miscellaneous			
Steering wheels (front / rear)		2 / 2	2 / 2
Drive wheels (front / rear)		2 / 2	2 / 2
Safety cab homologation		ROPS - FOPS level 2 cab	ROPS - FOPS level 2 cab
Controls		Monolever	Monolever

MXT 840 P - Dimensional drawing

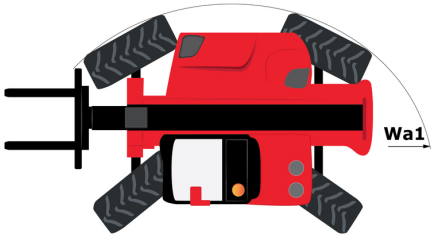

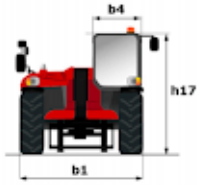

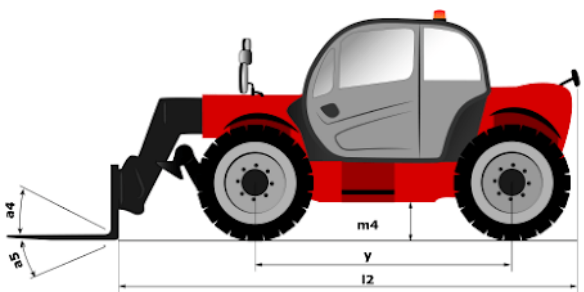

MXT 840 P - Load chart

Machine on tyres with forks Metric

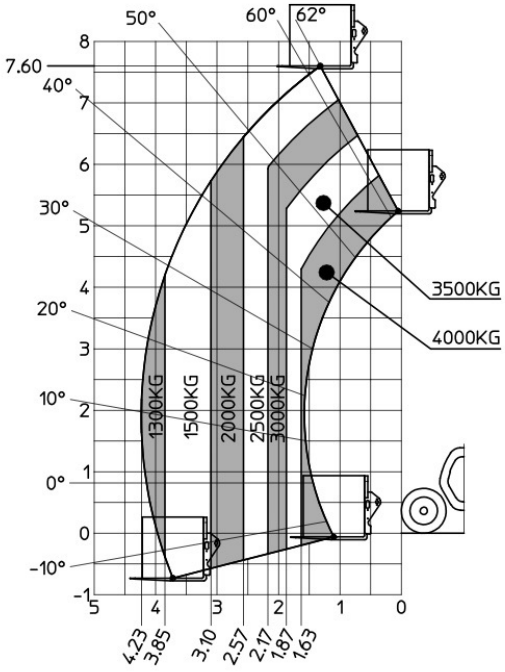

Head Office
B.P. 249 - 430 rue de l'Aubinière
44150 Ancenis Cedex - France
Tel: +33 (0)2 40 09 10 11 - Fax: +33 (0)2 40 09 10 97
www.manitou.com

This publication provides a description of the configuration versions and options for Manitou products, which may differ for equipment. The equipment presented in this brochure may be part of a series, as an option, or it may not be available, depending on the versions. Manitou reserves the right, at any time and without notice, to amend the specifications described and represented. The specifications provided do not bind the manufacturer. For more details, please contact your Manitou agent. This is not a contractually binding document. The presentation of the products is not contractually binding. List of specifications non-exhaustive. The logos as well as the visual identity of the company are owned by Manitou and cannot be used without authorisation. All rights reserved. The photos and diagrams contained in this brochure are only provided for consultation and information purposes.
MANITOU BF SA - Limited company with board of directors - Share capital: 39,668,399 euros - 857 802 508 RCS Nantes